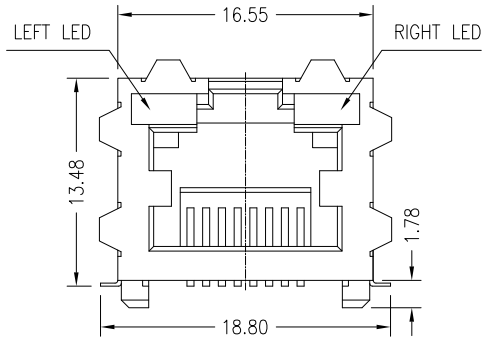

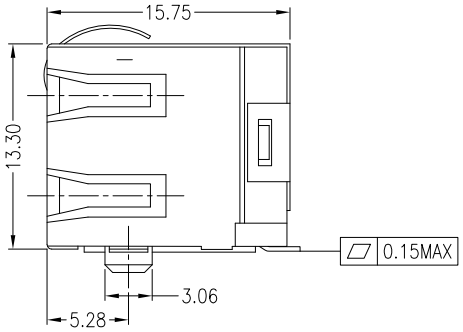

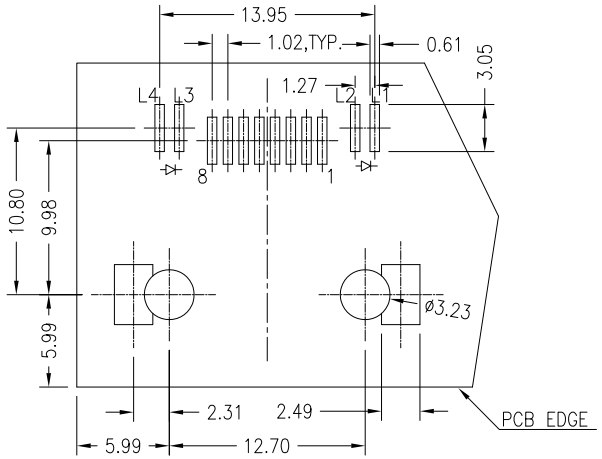

RECOMMENED PCB LAYOUT
COMPONENT SIDE
TOLERANCE ±0.05

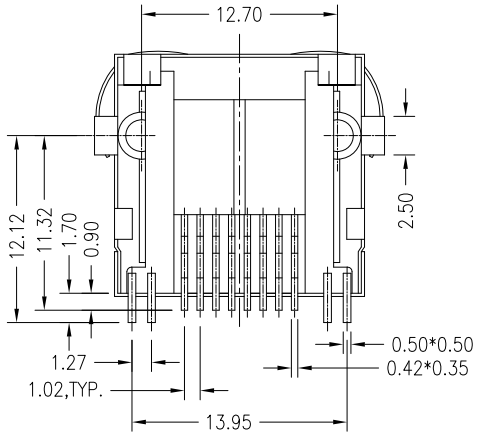

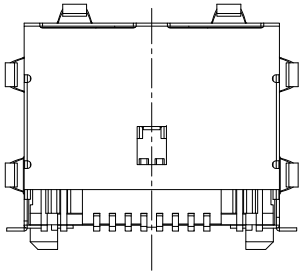

LED SCHEMATIC:

LEFT LED: L4 + —▷— − L3

RIGHT LED: L2 + —▷— − L1

NOTES:

1. MATERIALS:
   HOUSING: HIGH TEMP. THERMOPLASTIC, PA6T,UL94V−0,BLACK.
   CONTACTS: T=0.35 mm PHOSPHOR BRONZE, 50u" NICKEL UNDERPLATE ON ALL AREA,100u" TIN ON SOLDER AREA, AND GOLD ON CONTACT AREA.
   SHELL:BRASS,T=0.20mm
2. OPERATING TEMPERATURE: −40℃ ~ +85℃
3. JACK CAVITY CONFORMS TO FCC RULES AND REGULATIONS PART 68, SUBPART F

REV.	ECN. NO.	DRAWN	DATE
A	NEW	JOHN	27/03/2015

DST-conn Tech. Co., Ltd.

HSF Compliant

⊗:QUALITY CONTROL ITEM	GENERAL TOLERANCE .X± 0.38 X.°± 2° .XX± 0.25 .X°± 1° .XXX± 0.13	PART NO.: 11JES1S−xxxxx	
APPROVED		TITLE: RJ45 1X1 TAB UP 8P8C W/ LED , SHELL , T/S	
CHECKED			
DRAWN	UNIT: mm	SCALE: 1:1	SHEET: 1/1 REV.: A

SIZE: A4

說明: △ :備註 ◇ :版本變更 Ⓝ :尺寸序號 ■ :重點尺寸 ▼ :CPK尺寸