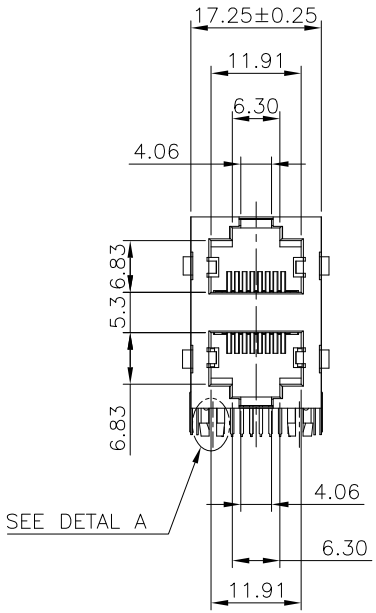

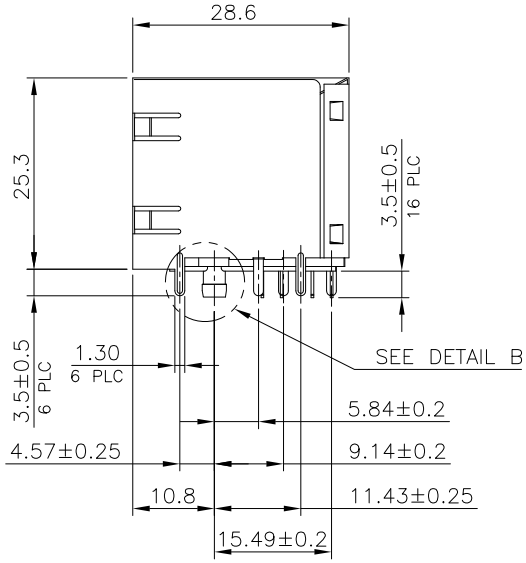

NOTE:

CAVITY CONFIRMS TO FCC RULES AND REGULATIONS PART 68, SUBPART F.

1. MATERIAL:
   - 1.1 HOUSING: PA46, WITH GLASS FIBER, L94V-0, STANDARD COLOR-BLACK.
   - 1.2 INSERT HOUSING: PBT, WITH GLASS FIBER, UL94V-0, STANDARD COLOR-BLACK.
   - 1.3 COVER: PA46, WITH GLASS FIBER, UL94V-0, STANDARD COLOR-BLACK.
   - 1.4 CONTACTS: PHOSPHOR BRONZE.
   - 1.5 SHIELD: BRASS.

2. FINISH:
   - 2.1 CONTACTS: GOLD PLATED ON CONTACT AREA, 0.0254μm [1μ″] GOLD PLATED ON SOLDER TAIL, WITH ENTIRE CONTACT UNDERPLATED 1.27μm [50μ″] MIN. NICKEL
   - 2.2 SHELL: 0.508μm [20μ″] MIN. SOLDERABLE NICKEL PLATED.

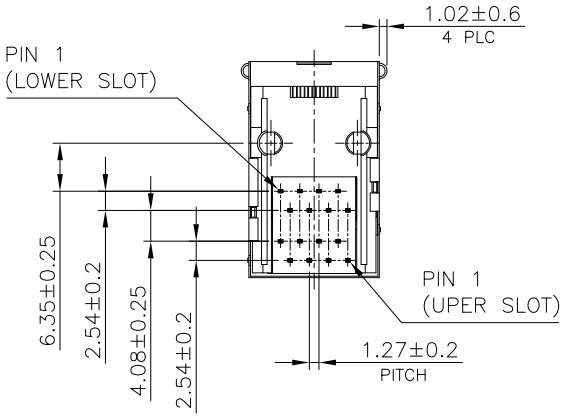

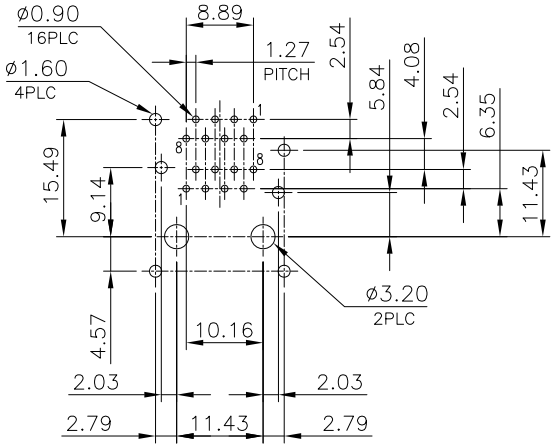

RECOMMENDED PCB LAYOUT
RECOMMENDED PCB THICKNESS: 1.6mm
TOLERANCE:±0.05mm (TOP VIEW)

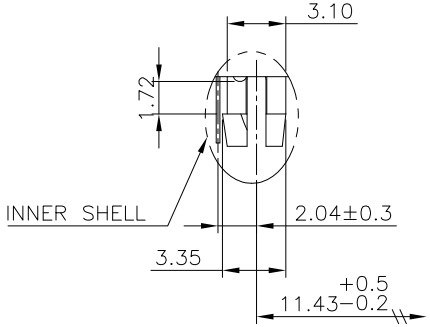

DETAIL A
SCALE 2.5:1

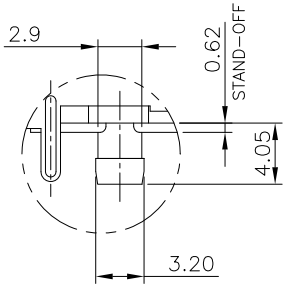

DETAIL B
SCALE 2:1

REV.	ECN. NO.	DRAWN	DATE
A	NEW	JOHN	28/03/2015

DST-conn Tech. Co., Ltd.

HSF Compliant

ⓧ:QUALITY CONTROL ITEM	GENERAL TOLERANCE .X± 0.38 X.°± 2° .XX± 0.25 .X°± 1° .XXX± 0.13	PART NO.: 21JS31D−xxxxx	
APPROVED		TITLE: RJ45 2X1 PORT 8P8C W/O LED W/ SHELL , T/S	
CHECKED			
DRAWN	UNIT: mm	SCALE: 1:1	SHEET: 1/1 REV.: A

SIZE: A4

說明: △ :備註 ◇ :版本變更 Ⓝ :尺寸序號 ■ :重點尺寸 ▼ :CPK尺寸