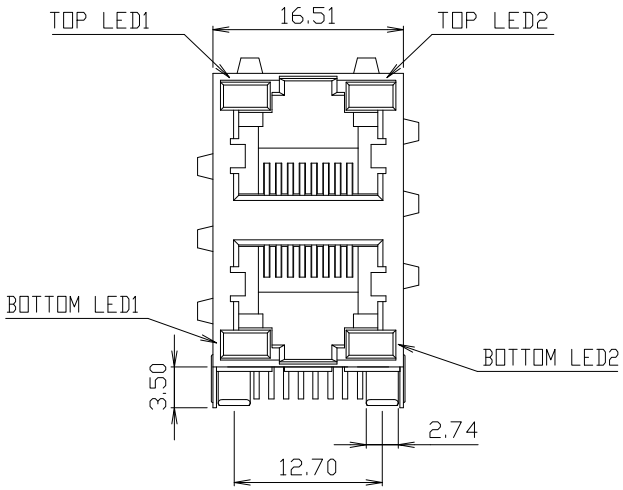

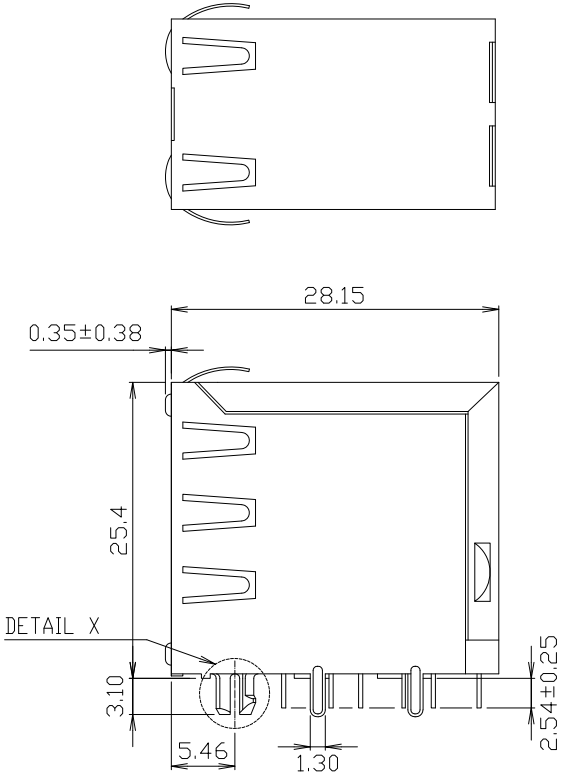

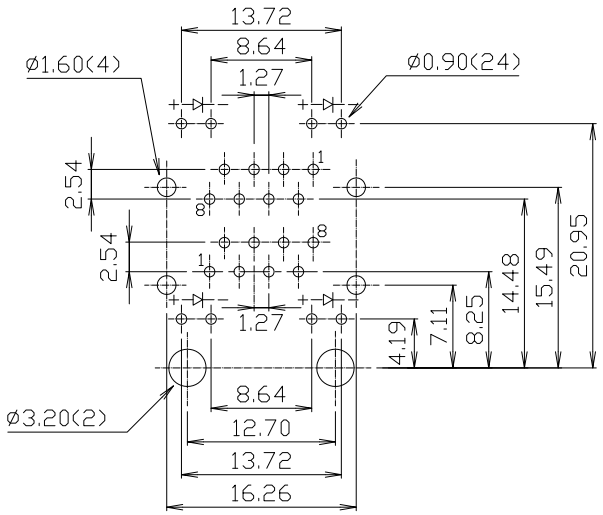

PCB LAYOUT
Ref.

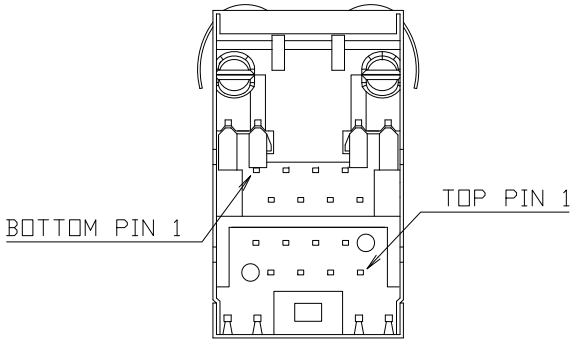

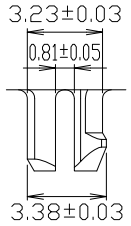

DETAIL X

MATERIALS:

- BOTTOM HOUSING-DSM STANYL TE250F6 (NYLON-46)
  HEAT DEFLECTION TEMP.290°
  BLACK COLOR, UL94V-0
- TOP HOUSING-PBT POLYESTER UL94V-0
  MIXED GLASS FIBER, BLACK COLOR.
- CONTACTS-0.35mm THICK PHOS-BRONZE PLATED
  WITH HARD GOLD ON SOLDER AREA.
- SHIELD-0.25mm THICK COPPER ALLOY,
  PLATED WITH NICKEL.

CAVITY CONFIRMS TO FCC RULES AND REGULATIONS
PART 68,SUBPART F.

REV.	ECN. NO.	DRAWN	DATE
A	NEW	JOHN	28/03/2015

DST-conn Tech. Co., Ltd.

HSF Compliant

⊗:QUALITY CONTROL ITEM	GENERAL TOLERANCE .X± 0.38 X.°± 2° .XX± 0.25 .X°± 1° .XXX± 0.13	PART NO.: 21JS66D-xxxxx	
APPROVED		TITLE: RJ45 2X1 PORT 8P8C W/ LED , SHELL , T/S	
CHECKED			
DRAWN	UNIT: mm	SCALE: 1:1	SHEET: 1/1 REV.: A

SIZE: A4

說明: △ :備註 ◇ :版本變更 Ⓝ :尺寸序號 □ :重點尺寸 ▽ :CPK尺寸