REVISION	A

RoHS Compliant

SYMB	REVISON	DATE	APVD.

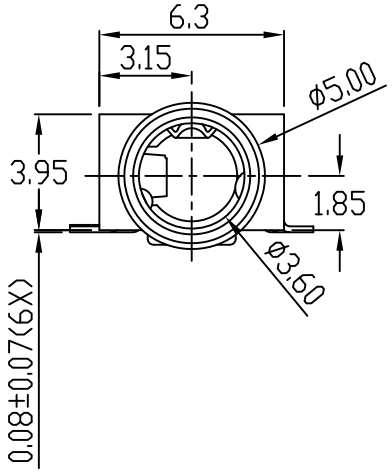

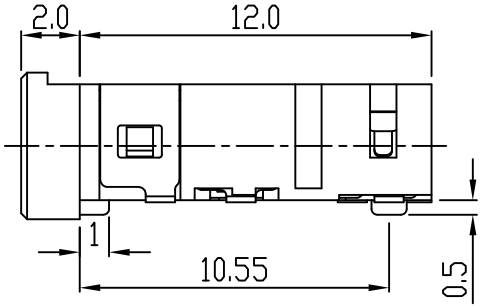

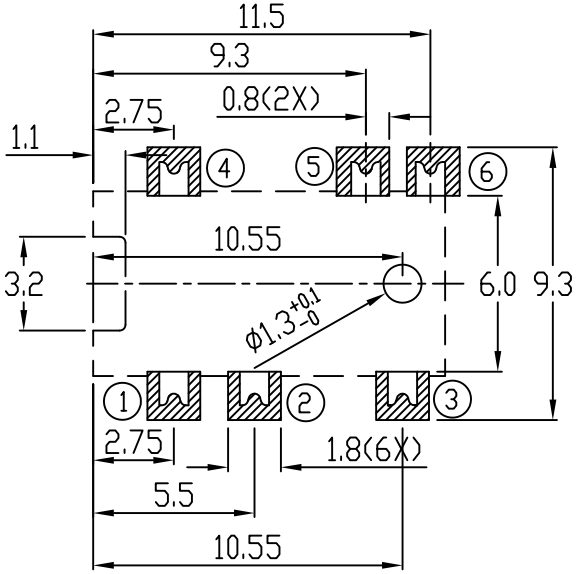

P.C.B LAYOUT
TOP VIEW

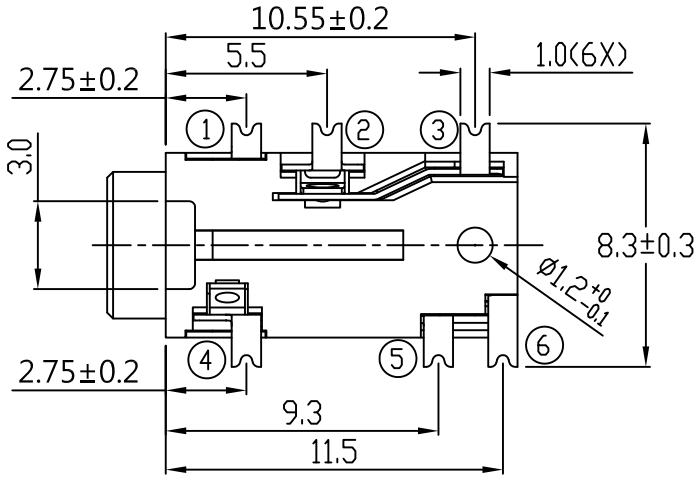

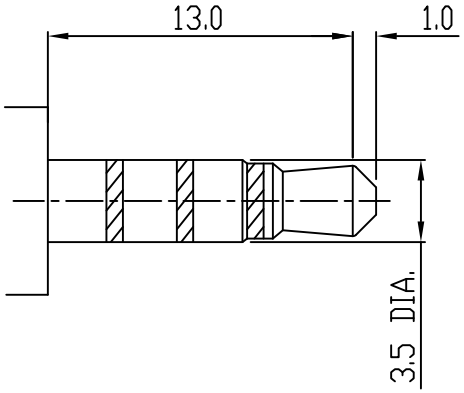

MATE PLUG

MODEL NO.	A33950S-4AEBAR
SCHEMATIC	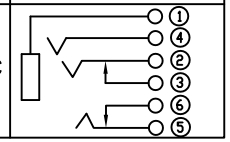

TITLE	PHONE JACK (4 POLES)		DRAWN	J.Pang	TOLERANCE OTHERWISE UNLESS SPECIFIED		8				
PART NO.	A33950S-4AEBAR		CHECKED	G.C.Chen	UP TO 5	±0.2	7				
DRAW NO.	ST210		APPROVED	H.K.Lai	ABOVE 5 ~ 30	±0.3	6				
SCALE	4:1	UNIT mm	DATE	15-02-2011	ABOVE 30 ~ 50	±0.4	5				
					ABOVE 50	±0.5	4				
					ANGLE	±3°	3	TERMINAL1.2.4.5	C5210	4	Au PLATED
							2	HOUSING	LCP	1	BLACK
							1	TERMINAL3.6	C2680	2	Au PLATED
							NO.	PARTS	MATERIAL	QTY.	FINISHING

DST-conn Tech. Co., Ltd.

Copyright Reserved,Please Do Not Copy. 版权所有,不得翻印.