RoHS Compliant

SYMBOL	REV.	REVISION	APPROVAL	DATE
	A	新版圖紙	Winky	2012.08.13

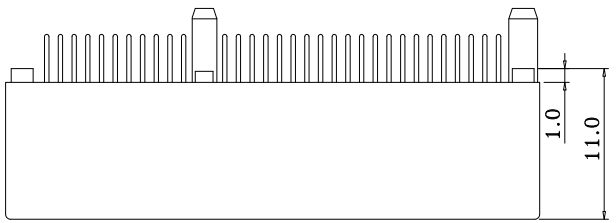

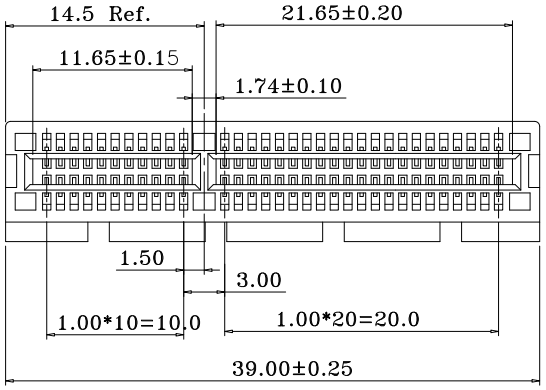

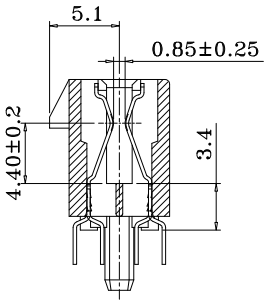

SECTION A-A

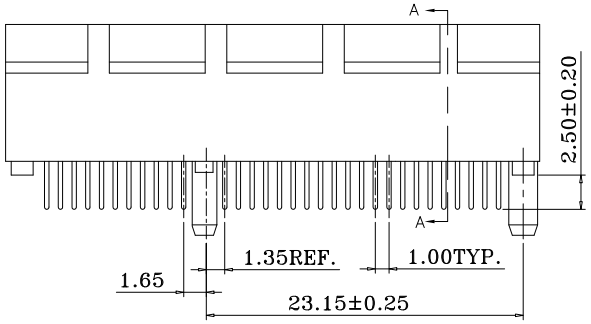

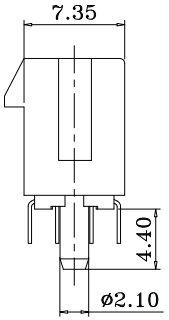

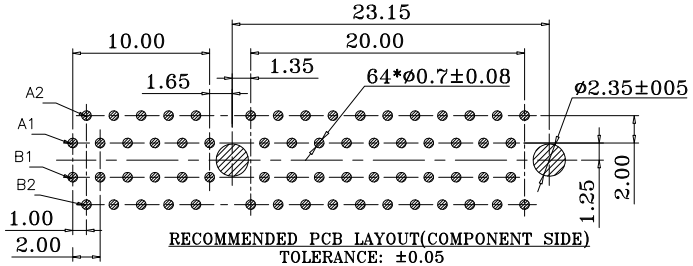

RECOMMENDED PCB LAYOUT(COMPONENT SIDE)
TOLERANCE: ±0.05

*Material:

1.Housing: PA6T/PA46/LCP,UL 94V-0, Color:Black;
2.Terminal: C2680 EH,T=0.25mm;
Plating: Gold in contact area;
80u" Min Tin in solder area;
30u" MIN.NICKEL UNDERPLATING OVER ALL.

*Electrical Characterisrics:

1:Contact Resistance: 30mΩ Max.
2:Insulation Resistance: 1000MΩ Min.
3:Dielectric Strength: 500V DC/1MIN.
4.Contact Current rating: 1.1 A Per Pin Min.

*Mechanical Characterisrics:

1:Insertion Force: 1.15N per contact pair Max.
2:Extraction Force: 0.15N per contact pair Min.
3.Durability rating: 50 Cycles

*Deflection Temperature: 255°C

ORDER INFORMATION:

DI37-EVxxx64xxZ

Material:
B: PA6T
M: PA46
E: LCP

Color:
R:Red,
A:Orange
Y:Yellow
G:Green
E:Blue
P:Purple
B:Black
W:White

Plating:
0: Flash.Gold in contact area
1: 3u" Min.Gold in contact area
2: 5u" Min.Gold in contact area
3: 10u" Min.Gold in contact area
4: 15u" Min.Gold in contact area

64: No. of Pins

Packing:
E: Tube
T: Tray
G: Box

Enviroment Protection:
L: RoHS
G: GP
H: Halogen-free

DST-conn Tech. Co., Ltd.

COPYRIGHT RESERVED, PLEASE DO NOT COPY.

PART NAME	PCIe 64P传统型导柱式			DRAWING	Winky	DWG. No.	DI37
PART NO.	DI37-EVxxx64xxZ			CHECK	Roy	REV.	A
UNIT : mm	TOLERANCE UNLESS OTHERWISE SPECIFIED	X.X ±0.38 X.XX ±0.25 X.XXX ±0.10	ANGLE ±2°	APPROVAL	John	DATE	2012.08.13
				SCALE	1:1	PAGE	1 OF 1