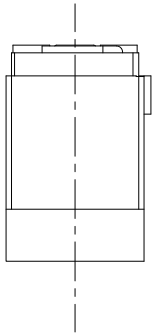

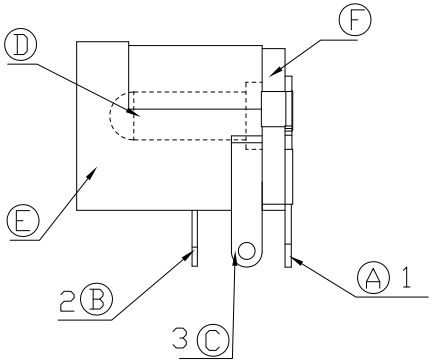

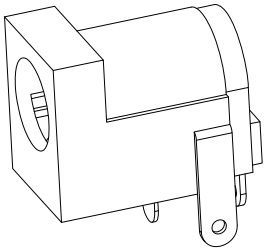

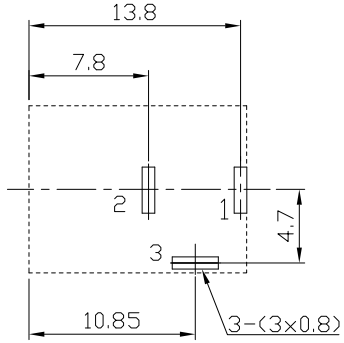

PCB LAYOUT TOP VIEW

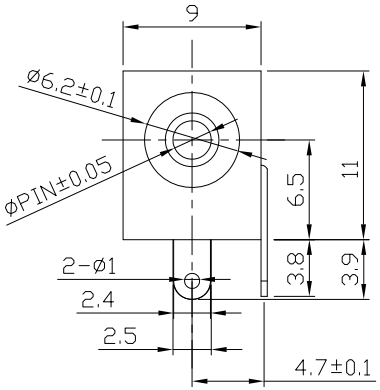

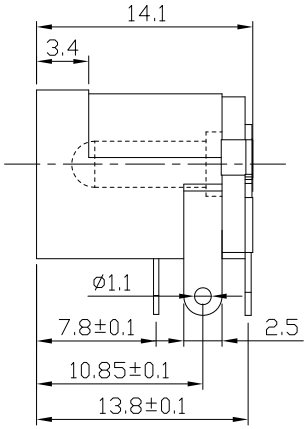

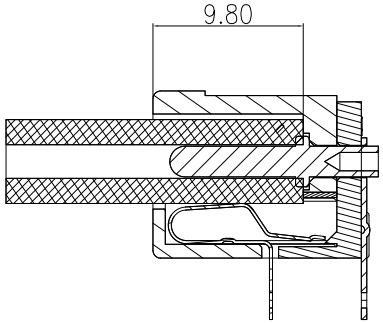

PLUG IN

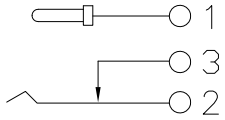

CIRCUIT DIAGRAM

NOTE:

ODA04Lx xxx x-1

MATERIAL:
G: PBT
D: PA9T

PIN DIM:

PACKAGE:
T: TRAY
R: TAPE REEL
G: BAG

P/N	PIN DIM
ODA04Lx200x-1	PIN=2.0 mm
ODA04Lx250x-1	PIN=2.5 mm

SPECIFICATIONS:

1. ELECTRICAL CHARACTERISTICS:
   1-1. RATING: 20V,7.5A (ODA04Lx250x-1 FOR 48V,2A)
   1-2. CONTACT RESISTANCE: 30mΩ MAX.(INITIAL)
   1-3. DIELECTRIC WITHSTANDING VOLTAGE: 500V AC FOR ONE MINUTE
   1-4. INSULATION RESISTANCE: 100MΩ MIN. MEASURED BY 500V DC
2. MECHANICAL CHARACTERISTICS:
   2-1. INSERTION FORCE : 0.3~3.0 KGF
   2-2. WITHDRAWAL FORCE : 0.3~3.0 KGF
3. LIFE TEST: 5,000 CYCLES MIN.
4. FOR REFLOW SOLDERING LEAD-FREE PROCESS.
5. *REPRESENT CRITICAL DIMENSIONS.

No.	PART NAME	QTY	MATERIAL(THICK,COLOR)	REMARK
Ⓕ	HOUSING	1	PBT or PA9T(Black)	
Ⓔ	COVER	1	PBT or PA9T(Black)	
Ⓓ	PIN	1	BRASS □=2.5 OR 2.0	CuSn-Plated
Ⓒ	TERMINAL	1	BRASS t=0.35	Ag-Plated
Ⓑ	TERMINAL	1	PHOSPHOR BRONZE t=0.25	Ag-Plated
Ⓐ	TERMINAL	1	BRASS t=0.35	Ag-Plated

ANGULAR	±5°
16 < L ≤ 63	±0.3
4 < L ≤ 16	±0.2
L ≤ 4	±0.15
UNSPECIFIED TOLERANCE	

DSND	Winky	DATE	2008.10.04	SCALE: 2 : 1	NAME: DC POWER JACK
CHKD	Roy	DATE	2008.10.04	VIEW:	PART.NO. ODA04Lxxxxx-1
APVD	John	DATE	2015.04.08	UNIT: mm	

DST-conn Tech. Co., Ltd.